FLYBOX®

VIGILUS for **Rotax EP** and **Yamaha EPeX** engines

Installation manual

Revision 1 - Jan 2020
For firmware version 1.7

Installation Manual, Safety Instructions and Warning Booklet

This product is not TSO'd and cannot be installed into traditional FAA Part 23 and similarly Type-Certificate Aircraft

Document A2020 VIGILUS EP
Installation
Revision#1 - 01/2020
For firmware version 1.7

SECTIONS

Thank you for purchasing a Flybox® **Vigilus** instrument.

Our intent in developing **Vigilus** instrument family was to create a light and compact product, powerful and easy to install and use.

The **Vigilus** instrument family is equipped with a state-of-the-art highly visible display, a powerful 32 bit microcontroller and the latest generation of solid state sensors to ensure reliability and accuracy over time.

The owner has the possibility to keep the instrument software up-to-date by downloading the latest available revision from www.flyboxavionics.it website and installing it using a USB pen drive.

We are confident our products will be satisfactory and will make your flying experience a pleasant one.

NOTE: Vigilus Edge Performance version is suitable for Rotax EP and Yamaha EPeX engines only.

Symbols used in the Installation and User Manual, Safety Instructions and Warning Booklet

WARNING: Used to indicate a dangerous situation that can cause personal injury or death if the instruction is disregarded.

CAUTION: Used to warn the user, it indicates a potentially hazardous situation or improper use of the product.

NOTE: Used to highlight important information.

WARNING: These instructions must be provided to users before use, and retained for ready reference by the user.
The user must read, understand (or have explained) and heed all instructions and warnings supplied with this product and with those products intended for use in association with it. Always keep a copy of the Installation and User Manual, Safety Instructions and Warning Booklet on the aircraft. In case of change of ownership, the Installation and User Manual, Safety Instructions and Warning Booklet must be delivered together with all of the other papers.

WARNING: Read the Installation and User Manual, Safety Instructions and Warning Booklet before installing the device on your aircraft and follow the procedure described therein.

WARNING: This device is intended to be installed on NON-TYPE CERTIFIED AIRCRAFT ONLY, as it does NOT require any air operator's certificate. Refer to your national aviation authorities to check if this device can be installed on your aircraft.

WARNING: It is the owner's responsibility to test this device before operating the aircraft and to make sure nobody is using it unless properly instructed and authorized to do so.

WARNING: Once the installation process is completed, it is extremely important to test the device before taking off to make sure it works properly. Therefore, we strongly suggest to double check all of the electronic instruments available on the aircraft and to turn them on to verify they function correctly.

WARNING: For safety reasons, the Vigilus operational procedures must be learned on the ground.

WARNING: This device is operated through a software which from time to time can be updated and/or subject to change. Please, always refer to the Installation and User Manual, Safety Instructions and Warning Booklet for the software version used in your instrument. To obtain updated manuals, please visit www.flyboxavionics.it

---

WARNING: It is the responsibility of the installer to properly install the device on the aircraft. In case of calibration, or any technical or functional customization of the device, the responsibility lies with the individual who carried out such operation.

FAILURE TO DO SO MAY RESULT IN SERIOUS INJURY OR DEATH.

WARNING: If this product is not used correctly, or it is subjected to additions or alterations, the effectiveness of this device may be considerably reduced.

WARNING: Alterations, additions, or repairs not performed by the instrument manufacturer or by a person or organization authorized by the manufacturer shall negate any warranty.

WARNING: DO NOT rely solely on the Vigilus device to determine the level of fuel available in the tanks.

WARNING: The unit isn't waterproof. Serious damage could occur if the unit is exposed to water or spray jets.

NOTE: The consumer decides of his own free will if the purchased product is suitable and safe for his need. If the consumer does not agree with the notices contained in this Installation and user Manual, Safety Instructions and Warning Booklet, do not install this instrument in his aircraft.

NOTE: Flybox Avionics reserves the right to change or improve its products as well as terms, conditions, and notices under which their products are offered without prior notice.

NOTE: The Installation and User Manual, Safety Instructions and Warning Booklet will be updated annually if needed.

All changes or updates will be published on our website www.flyboxavionics.com in the "support" section.

NOTE: Upon receipt of the instrument it is advisable to register on our website www.flyboxavionics.it in the "product registration" section.

The Registration data will be used only to send important news or information about available firmware updates or to communicate safety information about the instrument.

CAUTION: The pilot must understand the operation of this instrument prior to flight, and must not allow anyone to use it without knowing the operation. Don't use this instrument in flight until you are sure of the correct operating of the same.

Index

SECTION 1

SECTION 2

SECTION 3

SECTION 1

1.1 INVENTORY OF MATERIALS

1.1.1 KIT CONTENTS

In this section are listed all the material supplied with the Vigilus + Remote Module kit. Use this list to verify that all the kit components have been delivered correctly.

QTY	Description
1	VIGILUS INSTRUMENT
1	REMOTE MODULE UNIT
1	16P CONNECTOR RECEPTACLE HOUSING
1	22P CONNECTOR RECEPTACLE HOUSING
2	24P CONNECTOR RECEPTACLE HOUSING
86	CRIMP CONTACTS
1	MICROFIBRE CLOTH
1	USB PEN DRIVE (CONTAINS THIS MANUAL)
1	VIGILUS EP QUICK REFERENCE CARD

1.1.2 OPTIONAL ACCESSORIES

This section lists the optional items that can be ordered. For the current price list and prices see the web page:

http://www.flyboxavionics.it/vigilus.html

Flybox P/N	Description
652020	Wiring harness for Vigilus and Remote Module for Edge Performance engines (Rotax - Yamaha)
651055	Software key for Fuel Computer activation
601010	EGT probe with 2.5 m cable + coupling to weld
601012	Pre-wired cable for EGT probe with separable connector
601020	OAT probe (Outside Air Temp.) with 2.5 m cable
601040	Fuel pressure transducer 2 mt cable + fitting 0-4 Bar
601060	Ammeter probe +/- 50 A
602000	Oil pressure probe, 4-20mA 0-10 Bar
603000	Hand crimping tool for Molex Microfit contacts
653000	Video Grabber 3 input composite video to USB
601070	Bullet Color camera
654000	Vigilus GPS receiver

1.2 INSTALLATION PREPARATION

The following sections provide information needed for planning the electrical and mechanical installation of Vigilus and Remote Module system.

It is recommended that you read this document completely before starting to familiarize yourself with all aspects of the installation.

The installation consists of the following steps:

1 - Inventory of all needed parts.
2 - Planning/layout of the installation.
3 - Install Vigilus in a suitable location following the instructions in chap.1.3.
4 - Install the Remote Module in a suitable location following the instructions in chap.1.4.
5 - Assemble the wiring harness, cables and connectors.
6 - Connect the connectors on the Remote Module and on the Vigilus.
7 - Configure Vigilus software (refer to operating manual).

1.3 VIGILUS MECHANICAL INSTALLATION

Vigilus can be installed on the instrument panel in a standard 3 1/8" round hole; it is recommended to choose a position that allows optimal visibility of the display.

To install it perform this operations:

1- Unscrew the four plastic spacers on the backpanel.
2- Remove the backpanel.
3- Insert the Vigilus frontpanel on a 3 1/8" panel cutout.
4- From the back of the instruments panel, reinstall the Vigilus backpanel, screwing the four plastic spacers previously removed.

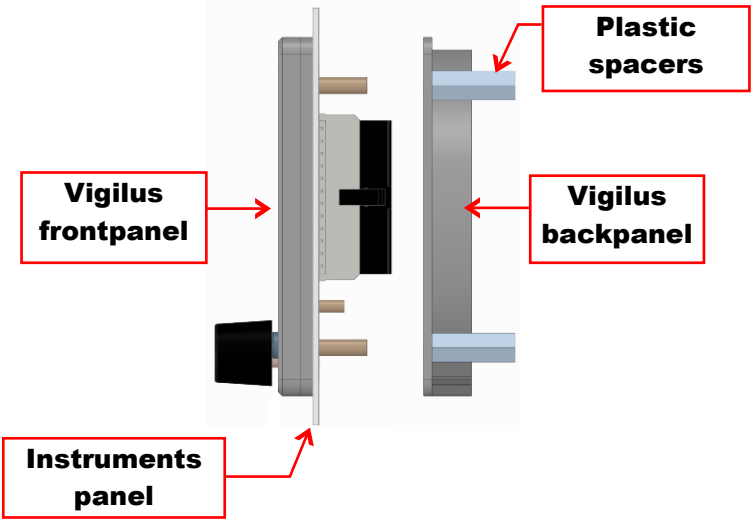

NOTE: Vigilus can be installed on instrument panel with thickness from 1.5 to 4 mm.

1.3.1 DIMENSIONS

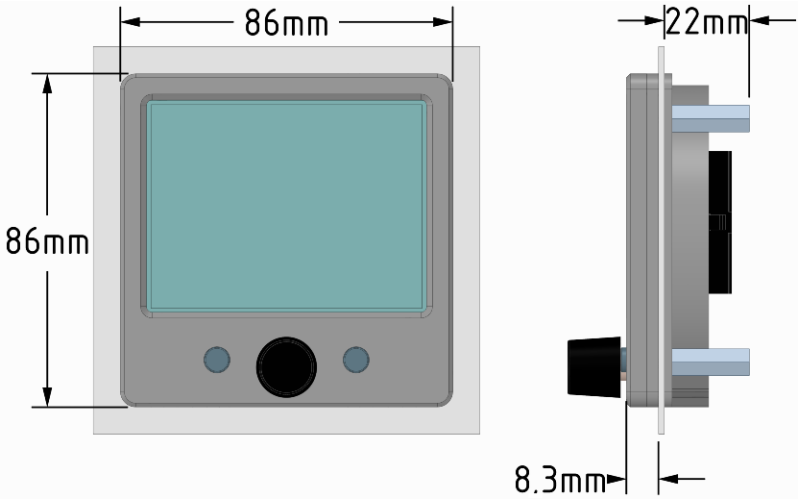

1.3.2 PANEL CUT-OUT

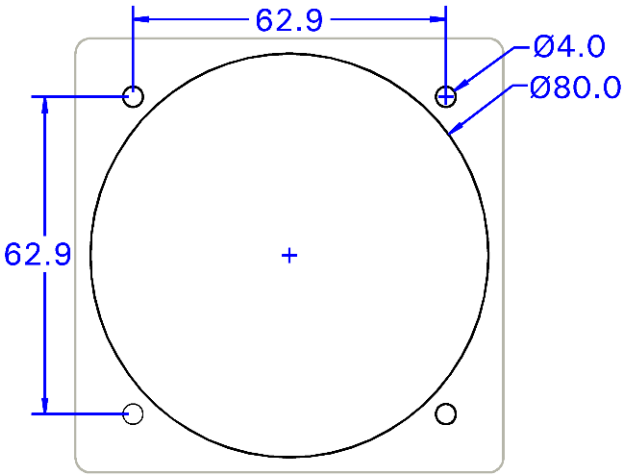

All dimensions are in millimeters

1.3.3 COOLING REQUIREMENTS

No cooling air is required for Vigilus, however, as with all electronic equipment, lower operating temperatures extends equipment life.

Avoid installing Vigilus near heat sources. If this is not possible, it is highly recommended that the air behind the panel be kept moving (by ventilation or a fan). Allow adequate space for installation of cables and connectors.

1.4 REMOTE MODULE MECHANICAL INSTALLATION

- The Remote Module can be installed using the four holes in the mounting tabs; the holes are suitable for M4 screws.
- The max length of the CAN-bus wires that connects the remote module to the Vigilus is 20 meters.
- When choosing a location where to install the remote module, consider that the operating temperature range is -20~+70°C.
- The Remote Module isn't sealed so choose a location protected it from dust, water, oil and atmospheric agents.

STATIC LINE

The Remote Module has the possibility to be connected to the static line of the aircraft.

NOTE: Connecting the static line to the Remote Module allows to have the indication of Density Altitude in the "Temperature" page.

1.4.1 DIMENSIONS

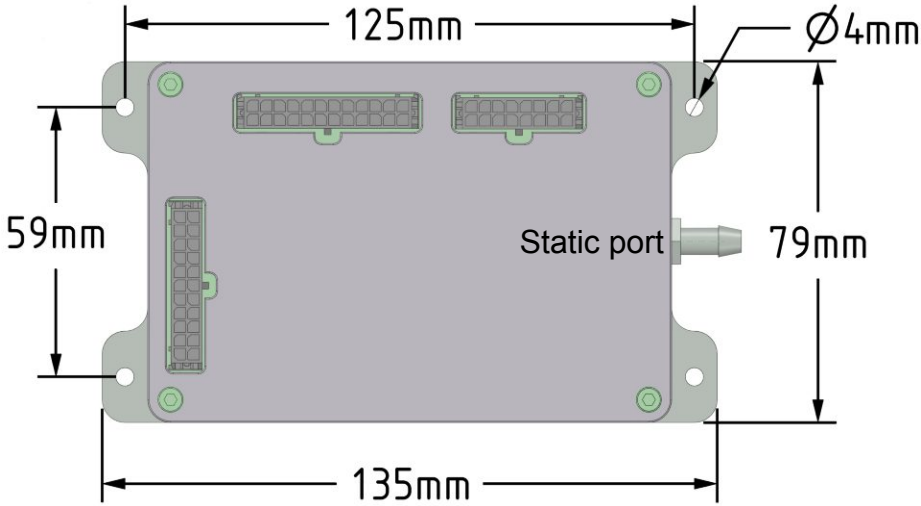

1.4.2 COOLING REQUIREMENTS

No cooling air is required for the Remote Module, however, as with all electronic equipment, a lower operating temperatures extends equipment life.

Avoid installing it near heat sources. If this is not possible, ensure that additional cooling is provided. Allow adequate space for installation of cables and connectors.

SECTION 2

2.1 ELECTRICAL INSTALLATION

CAUTION: To avoid damages to the Vigilus/Remote Module, take precautions to prevent Electro-Static Discharge (ESD) when handling connectors and associated wiring. ESD damage can be prevented by touching an object that is on the same electrical potential as the Vigilus/Remote module before handling them.

- On Vigilus back there is a 24-pin Molex Microfit connector, supplied with the crimp pin contacts (Molex 43030-0007) and the corresponding receptacles connector (Molex 43025-2400).

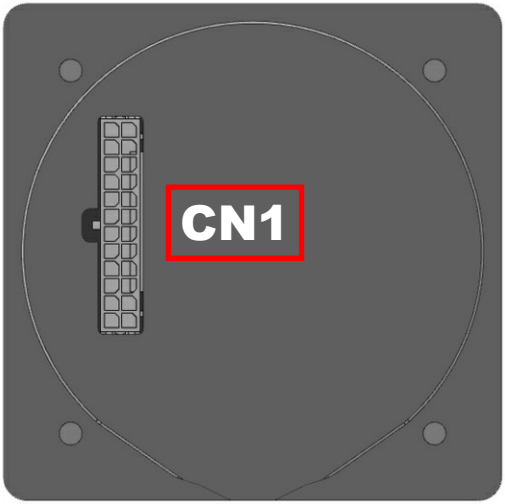

Vigilus connector

- On the Remote Module there are 3 Microfit connectors, each supplied with the corresponding receptacle and crimp pin contacts (Molex 43030-0007); receptacle codes are:
  - CN1: 16-pin Microfit connector (Molex 43025-1600)
  - CN2: 24-pin Microfit connector (Molex 43025-2400)
  - CN3: 22-pin Microfit connector (Molex 43025-2200)

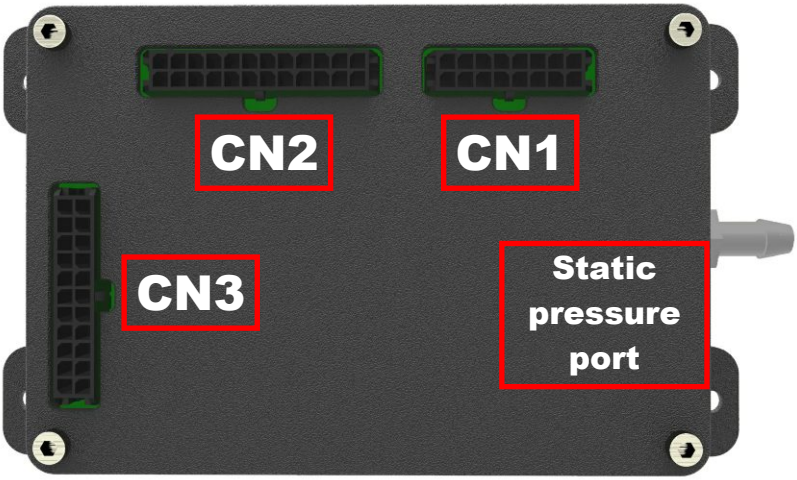

Remote Module connectors

2.1.1 CRIMPING TOOLS

Recommended crimping tools are listed in the following table; equivalent tools may also be used.

Contact type	Contact P/N	Recommended hand crimping tools	Recommended extraction tools
Micro-Fit 3.0 crimp terminal, 20-24AWG	Molex 43030-0007	Flybox 603000 or Molex 63819-0000	Molex 11-03-0043

2.1.2 POWER SPECIFICATIONS

Vigilus and remote module are capable of operating at either 14 or 28 VDC. On the following table are listed the power requirements for Vigilus and remote module; the specified current draw is measured with the display backlight set to maximum brightness and with the optional USB Video Grabber plugged in and without any sensor attached to the Remote Module.

Power supply	Vigilus	Remote Module	Total (Vig+R.M.)
14 V	200 mA 2.8 W	50 mA 0.7 W	250 mA 3.5 W
28 V	100 mA 2.8 W	25mA 0.7 W	125 mA 3.5 W

CAUTION: Voltage peaks on the supply line that exceeds the operating limits can damage the device.

2.1.3 GENERAL WIRING HINTS

- It is recommended that Vigilus and Remote Module be installed prior to constructing the wiring harnesses and cables.
- Use aeronautic cable for the wiring.
- Take care to properly insulate any exposed wire to avoid short circuits between any of the wires.
- Do not solder thermocouple wires terminations. If it is necessary to split in separable harnesses the thermocouples connections, you must use proper cables and connectors, available also from FLYBOX® (see section 2.5.11 “Separable connections for thermocouples”.

- Check that there is ample space for the cabling and mating connectors.
- Avoid sharp bends in cabling.
- Avoid routing near cables and aircraft control mechanisms.
- Avoid routing cables near heat sources, RF sources, EMI interference sources, power sources.

The installer shall supply and fabricate all of the cabes, unless a pre-wired cable has been ordered.
If no pre-wired cable has been ordered, the required connectors and associated crimp contacts are supplied with the Vigilus kit.

CAUTION: Check wiring connections for errors before connecting any wiring harnesses and power on. Incorrect wiring could cause internal component damage.

2.1.4 CAN-BUS INFORMATION

Vigilus has two CAN bus interfaces (Controller Area Network). The first one is used to communicate with the Remote Module while the second is used to communicate with the ECUs of some engine types. The second CAN bus is not used with this application because Edge Performance engines communicate with Vigilus via RS232 serial port.
The basic electrical architecture of a CAN bus consists of a single twisted or shielded wire pair with a device connected at each end. Each end must be terminated with a 120 ohm resistor, that in the case of Vigilus and Remote Module is integrated inside the instruments so that the installer should simply connect together two pin on the connector to perform the required terminations. The maximum length from end to end of the CAN bus is 20 meters.
The wiring for the CAN bus connections can be twisted pair or shielded twisted-pair. We recommend the use of shielded wires for better performance, connecting the shield to the ground of both devices. It's important also that all the devices connected to a CAN bus share the same power ground reference. This means that the power ground of the various devices must be connected to a single ground point (do not use aircraft structure as a power ground).

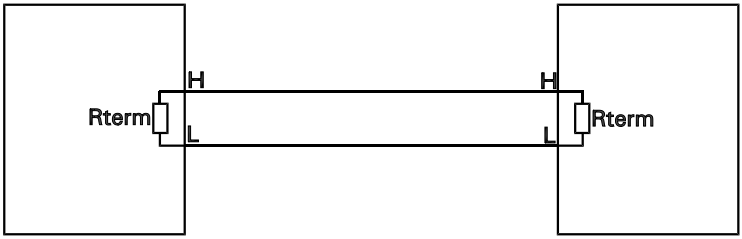

Basic CAN bus architecture

2.2 VIGILUS CN1 AND REMOTE MODULE CN1 CONNECTION DRAWING

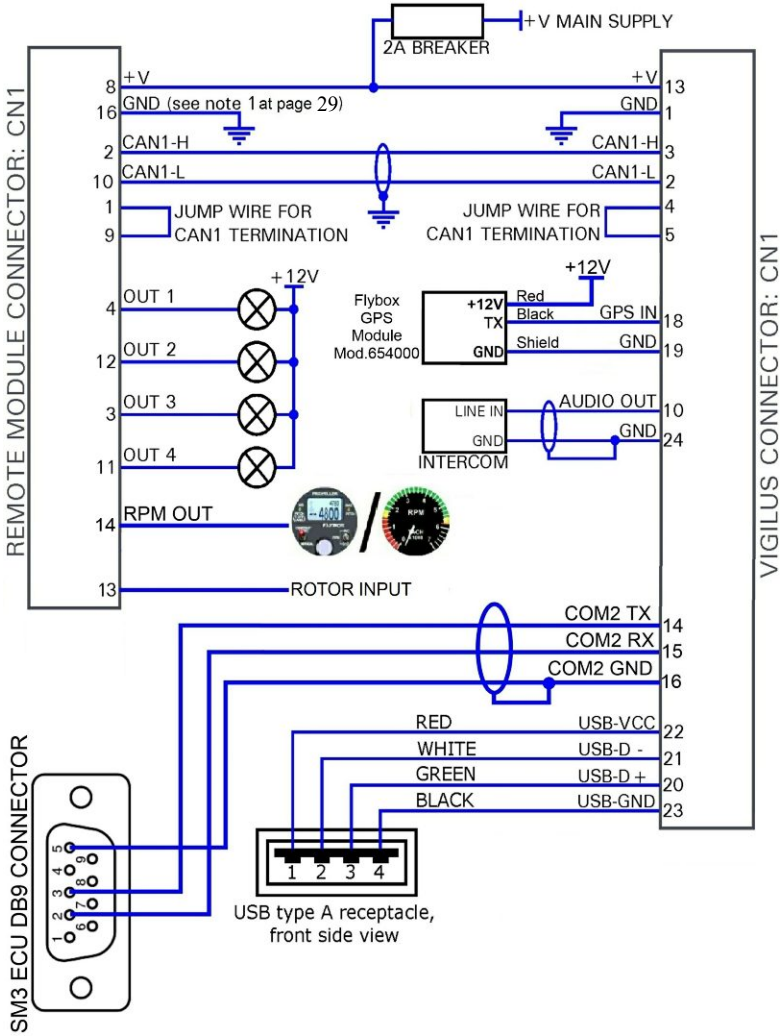

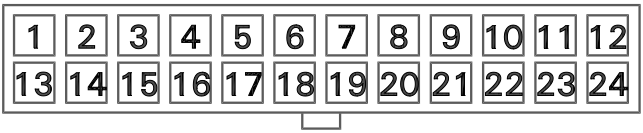

VIGILUS CONNECTOR CN1

24 pin Molex Microfit connector, view from wiring side

2.2.1 Vigilus CN1 table

PIN#	Description
1	GND Main supply
2	CAN1 L signal for Remote Module connection
3	CAN1 H signal for Remote Module connection
4	CAN1 termination
5	CAN1 termination
6	CAN2 L signal (Reserved for future use)
7	CAN2 H signal (Reserved for future use)
8	CAN2 termination (Reserved for future use)
9	CAN2 termination (Reserved for future use)
10	Low-level audio output for intercom connection
11	Not Used
12	Not Used
13	+V Main supply (10-28Vdc)
14	COM2 TX (to pin 3 engine ECU DB9 connector)
15	COM2 RX (to pin 2 engine ECU DB9 connector)
16	GND for COM2 (to pin 5 engine ECU DB9)

Continued >

2.2.1 Vigilus CN1 table

PIN#	Description
17	Not used
18	GPS serial input (connect to GPS TX signal)
19	GND for GPS input
20	USB-D+
21	USB-D-
22	USB-VCC
23	USB-GND
24	GND for audio output

2.2.2 VIGILUS CN1 SIGNALS EXPLANATION

- **Power supply (PIN#1-13):**

  Vigilus is capable of operating at either 14 or 28 VDC. AWG22 wire is enough, it's recommended to insert a 2A circuit breaker on the positive wire that supply both Vigilus and Remote Module.

- **CAN BUS #1 (PIN#2-3-4-5):**

  This CAN bus is used exclusively for communication with the Remote Module; use shielded or twisted wire pair, AWG24 is enough. Max length of this bus is 20 meters.

  The CAN bus termination (jump wire pin#4 with pin#5) is required.

- **Audio output (PIN#10-24):**

  This is a low-level audio output for intercom and is used to have the vocal alarm on the earphone.

  It's required to use shielded cable, AWG24 is enough.

- **ECU serial input/output (PIN#14-15-16):**
  Connect these pins to the DB9 of the engine Autronics ECU serial port.

- **GPS serial input (PIN#18-19):**
  Connect the pin 18 to the GPS "TX" signal of an external GPS. The GPS signal is used for displaying the actual time, for the "RANGE" and "RESERVE" functions on the optional fuel computer page and to have the date/time reference on the datalogger data. It's required to use shielded cable, AWG24 is enough. It is possible to connect an existing G P S or to use the Flybox optional GPS cod. 654000 (V i g i l u s GPS receiver).

- **USB (PIN#20-21-22-23):**
  Connect these pins to the USB receptacle included in the Vigilus kit. The USB port is used for software updates, for the backup/restore settings, to download the datalogger data and to connect the optional Video Grabber input adapter cod. 653000.
  The USB receptacle is already included in the optional harness if you have bought it.

NOTE 1:
It is essential that all the engine sensors and the remote module share the same ground and that there is virtually no measurable voltage between these grounds. Be sure that any ground wire of the remote module is routed to the engine block, and the engine block must have a good connection to the negative of the battery. Errors in the measurements are usually caused by points in the aircraft where there is improper grounding.

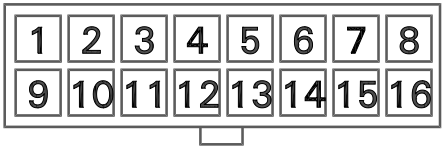

REMOTE MODULE CONNECTOR CN1
16 pin Molex Microfit connector, view from wiring side

2.2.3 Remote Module CN1 table

PIN#	Description
1	CAN1 termination
2	CAN1 H signal for Vigilus connection
3	Programmable output3 (active low, 300mA / 4W max)
4	Programmable output1 (active low, 300mA / 4W max)
5	Not used
6	Not used
7	Not used
8	+V Main supply (10-28Vdc)
9	CAN1 termination
10	CAN1 L signal for Vigilus connection
11	Programmable output4 (active low, 300mA / 4W max)
12	Programmable output2 (active low, 300mA / 4W max)
13	Rotor tachometer input (for rotorwings only)
14	RPM output
15	GND
16	GND Main supply

2.2.4 REMOTE MODULE CN1 SIGNAL EXPLANATION

- **Power supply (PIN#8-16):**
  The remote module is capable of operating at either 14 or 28 VDC. AWG22 wire is enough, it's recommended to insert a 2A circuit breaker on the positive wire that supply both Vigilus and Remote Module.
  To avoid errors in the measurements it is essential that the ground of the Remote Module share the same ground of all the engine sensors (so that there is virtually no measurable voltage between these grounds). Be sure that any ground wire of the Remote Module is routed to the engine block, and the engine block must have a connection to the negative of the battery.

- **CAN BUS (PIN#1-2-9-10):**
  This CAN bus is used exclusively for communication with Vigilus; use shielded or twisted wire pair, AWG24 is enough. Max length of this bus is 20 meters.
  The CAN bus termination (jump wire pin#1 with pin#9) is required.

- **Programmable output (PIN#3-4-11-12):**
  When an alarm occur on the Vigilus, it can be set to activate one of these four programmable output. The outputs are suitable to connect for example a lamp, led or buzzer. Maximum current for every output is 300mA / 4W. Output type is active low (pulled to ground when active).

- **Rotor tachometer input-for rotorwings only (PIN#13):**
  This rotor tachometer input support push-pull type sensors with 0-12volt output. It's possible also to use open-collector type sensors but it's required to connect a 10 Kohm pull-up resistor between this signal and +V Main supply.

- **RPM output for tachometers and constand speed propeller regulators (PIN#14):**
  The RPM Signal Out is used to connect propeller controller or analog tachometer. The signal is a square wave with amplitude 0~+V supply.

2.3 REMOTE MODULE CN2 CONNECTION DRAWING

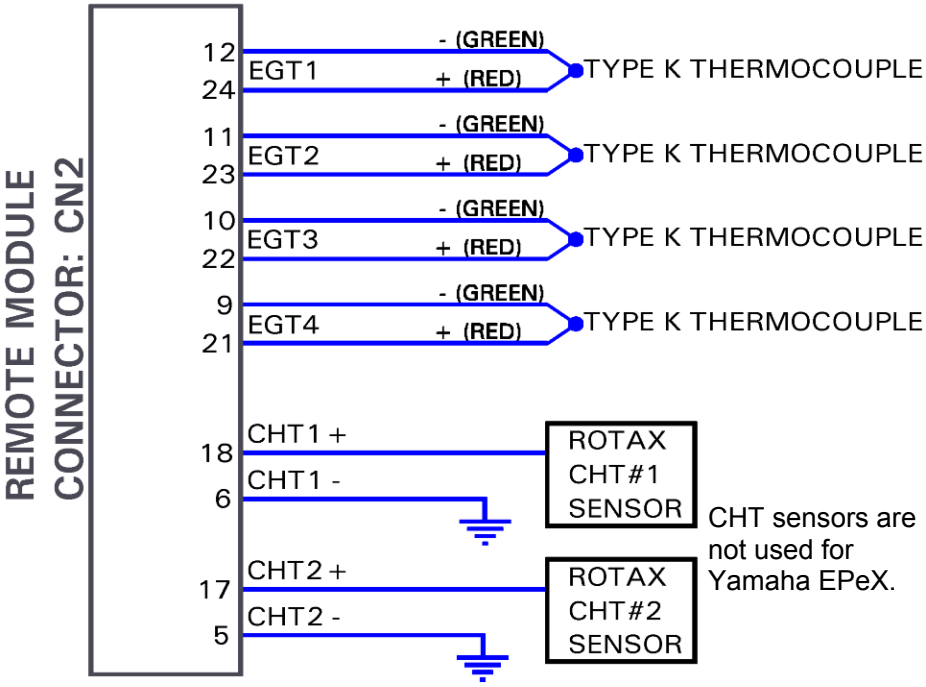

CHT sensors are not used for Yamaha EPeX.

NOTE: For the Rotax standard CHT sensors, pins 5 and 6 must be connected to ground (connect it to the same ground that supply power to the remote module that must be at the same potential of the engine GND).

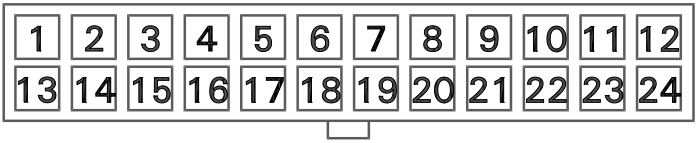

REMOTE MODULE CONNECTOR CN2

24 pin Molex Microfit connector, view from wiring side

2.3.1 Remote Module CN2 table

PIN#	Description
1	Not used
2	Not used
3	Not used
4	Not used
5	CHT2 thermocouple J (-) (connect to ground for other sensor types)
6	CHT1 thermocouple J (-) (connect to ground for other sensor types)
7	Not used
8	Not used
9	EGT4 thermocouple K (-)
10	EGT3 thermocouple K (-)
11	EGT2 thermocouple K (-)
12	EGT1 thermocouple K (-)
13	Not used
14	Not used

Continued >

2.3.1 Remote Module CN2 table

PIN#	Description
15	Not used
16	Not used
17	CHT2 sensor input: Rotax, PT1000 or thermocouple J (+)
18	CHT1 sensor input: Rotax, PT1000 or thermocouple J (+)
19	Not used
20	Not used
21	EGT4 thermocouple K (+)
22	EGT3 thermocouple K (+)
23	EGT2 thermocouple K (+)
24	EGT1 thermocouple K (+)

2.3.2 REMOTE MODULE CN2 SIGNAL EXPLANATION

- **CHT negative inputs (PIN#5-6):**

  The negative inputs of the CHT is used only if using J-type thermocouples. For the other type of sensor, included Rotax standard sensors, these pins must be connected to ground (connect it to the same ground that supply power to the remote module that must be at the same potential of the engine GND). See pag. 41 for further details.

- **CHT positive inputs (PIN#17-18):**

  Connect to these pins the single wire of the Rotax CHT sensors, one wire of the PT1000 resistive sensors (the other wire must be connected to ground) or the positive wire of the J-type thermocouple. See pag. 41 for further details.

- **EGT negative inputs (PIN#9-10-11-12):**
  Connect to these pins the negative wire of the thermocouples. See pag. 43 for further details..

- **EGT positive inputs (PIN#21-22-23-24):**
  Connect to these pins the positive wire of the thermocouples. See pag. 43 for further details..

2.4 REMOTE MODULE CN3

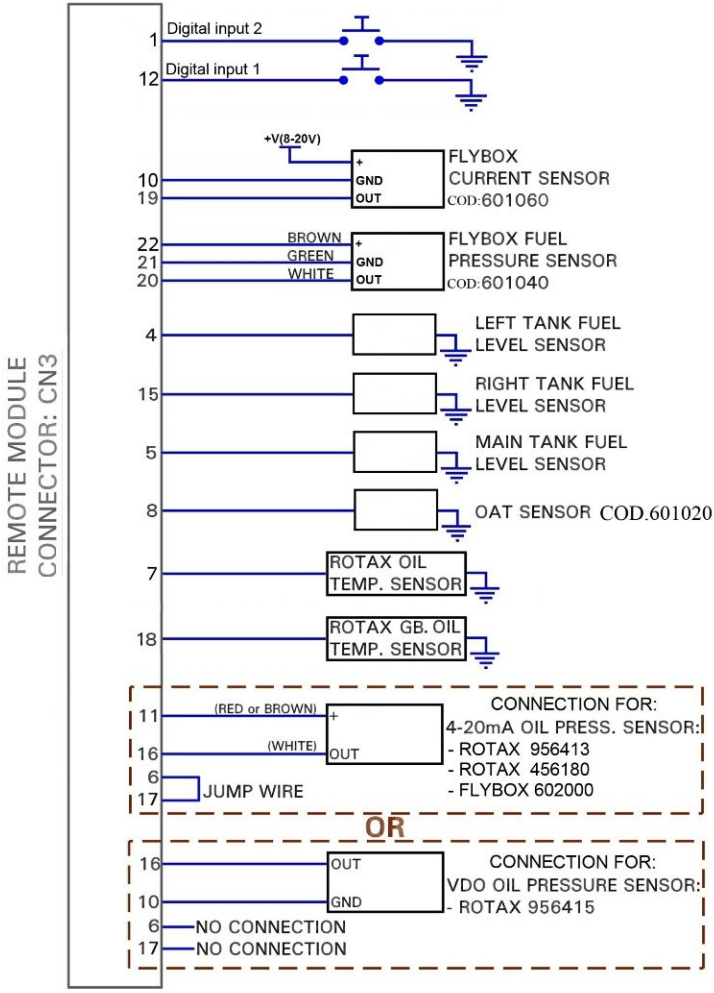

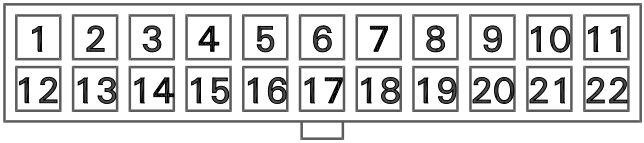

REMOTE MODULE CONNECTOR CN3

22 pin Molex Microfit connector, view from wiring side

2.4.1 Remote Module CN3 table

PIN#	Description
1	Digital input#2 allows to navigate between pages
2	Not used
3	Not used
4	Left tank fuel level sensor input
5	Main tank fuel level sensor input
6	Connect to pin#17 if using 4-20mA oil press. sensor
7	Oil temperature sensor input
8	Outside air temperature sensor input (PT1000)
9	Not used
10	GND for sensors supply
11	+VOUT for sensors supply, (see descr. on page 40)
12	Digital input#1 toggle main/temperature pages
13	Not used
14	Not used
15	Right tank fuel level sensor input
16	Oil pressure sensor input
17	Connect to pin#6 if using 4-20mA oil press. sensor

Continued >

2.4.1 Remote Module CN3

PIN#	Description
18	Gearbox temperature input (for Yamaha EPeX only)
19	Current sensor signal input
20	Fuel pressure sensor signal input
21	GND for sensors supply
22	+VOUT for sensors supply, (see descr. on page 40)

2.4.2 REMOTE MODULE CN3 SIGNAL EXPLANATION

- **Digital inputs (PIN#1-12):**
  Connect a momentary switch to pin 1 to toggle between Main page and Temperature page.

- Connect a momentary switch to pin 12 to navigate through the pages.

- **Fuel level sensor inputs (PIN#4-5-15):**
  These fuel level sensor inputs support resistive (with max resistance of 300 ohm) or capacitive (0-5V) sensors.
  If you install only 1 tank fuel level sensor (Main Tank) connect it to pin #5 of CN3 connector; if you install 2 tank fuel level sensors (Left and Right Tanks) connect the Left on pin #4 and the Right on pin #15 of CN3 connector. See pag. 49 for further details.

- **Jumper wire for oil pressure selection (PIN#6-17):**
  If you use 4-20mA type oil pressure sensor (Rotax 956413 or Flybox 602000) connect pin6 with pin17 with a jumper wire. If you use VDO type oil pressure sensor (Rotax 956415) leave unconnected both pin6 and pin17.

- **Oil pressure sensor input (PIN#16):**
  Support Rotax, and Flybox sensors. See pag. 45 for further details.

- **Oil temperature sensor input (PIN#7):**
  Support Rotax and PT1000 sensors. See pag. 45 for further details.

- **OAT - Outside air temperature (PIN#8):**
  Support PT1000 sensors. Flybox cod. 601020. See pag. 46 for further details..

- **+VOUT for sensors (PIN#11-22)**
  It delivers the same voltage supplied on the Pin 1 of the Remote Module CN1.

- **Current sensor input (PIN#19):**
  Support Flybox 601060 sensor. See pag. 47 for further details.

- **Fuel pressure sensor input (PIN#20):**
  Support Flybox 601040 sensor. See chap.2.5.9 for further details.

- **Gearbox temp sensor (PIN#18):**
  Support Rotax and PT1000 sensors.
  (for Yamaha EPeX only)

2.5 SENSORS INSTALLATION

2.5.1 CHT SENSORS

It is possible to connect up to 2 CHT sensors to the Remote Module, the supported sensor types are:

- ROTAX CHT sensors:
Rotax CHT sensors have one wire only because they are referred to engine GND. Connect the wires from sensors to pin #17 and #18 of CN2 Remote Module connector.

- J-type thermocouples:
Thermocouple probes have a two wires connection: positive wire and negative wire. Follow the indication in chapter The positive wire are connected to pins #17, to #18 (CHT2 to CHT1) of CN2 remote module connector, the negative wires are connected to pins #5 to #6 (CHT2 to CHT1).

- PT1000 resistive sensors:
This two wire resistive sensors must be connected between ground (GND) and pins #13 to #18 (CHT6 to CHT1) of CN2 remote module connector.

NOTE: It's not possible to mix different type of CHT sensors (i.e. 1 Rotax + 1 J thermocouple).

The CHT temperature are shown in Temperature page!!

2.5.2 CLT SENSOR

- ROTAX CLT sensor:
A Rotax CLT sensor (Coolant Temperature) can be connected to show the CLT on the main page.

2.5.3 EGT SENSORS

- K-type thermocouples

Thermocouple probes have two connection wires : positive and negative wire. Follow the thermocouple manufacturer's instructions to identify polarity according to wire colors.
If you need to lengthen the thermocouple wires or if you need to interrupt them, you will need to use special connectors and cable to avoid reading errors. These items can be supplied from Flybox.

Flybox® EGT thermocouples

Flybox® EGT thermocouples are K-type; positive wire is RED, negative is GREEN. Other thermocouples can have different colours.

Mechanical installation notes:

- Drill a 6 mm diameter hole in the exhaust manifold (at the position indicated by the engine's manufacturer) and weld the supplied probe coupling.
- Insert the thermocouple (with the nut and the probe retainer) in the probe coupling and position its extremity near the center of the exhaust manifold.

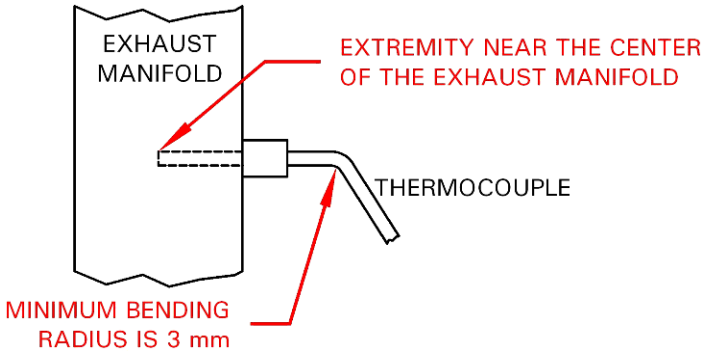

- Secure the thermocouple in this position by locking the nut. Note that the thermocouple can be bent if necessary, but with a minimum radius of 3 mm.

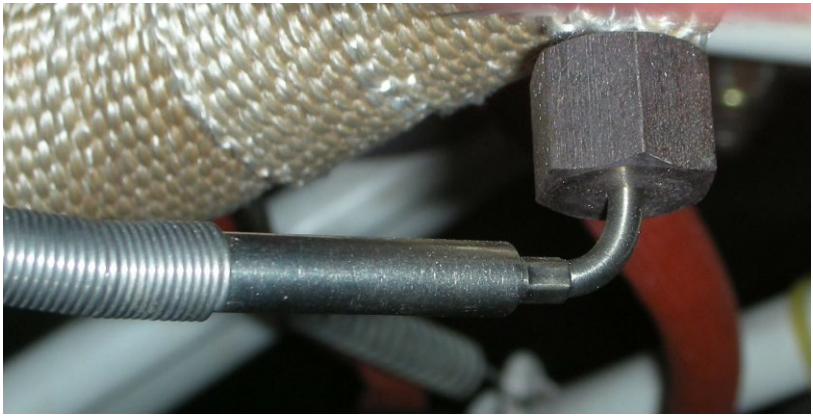

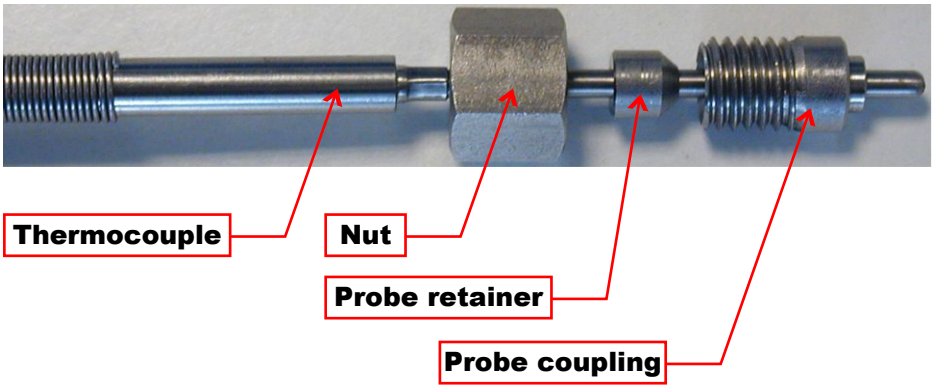

2.5.4 OIL TEMPERATURE SENSOR

The supported types of oil temperature sensors are:

- ROTAX preinstalled sensor:
Rotax oil temperature sensor has a single wire. Connect it to pin #7 of CN3 remote module connector.

- PT1000 resistive sensor:
This two wire resistive sensor must be connected between aircraft ground (GND) and pin #7 of CN3 remote module connector.

2.5.5 OIL PRESSURE SENSOR

The supported types of oil pressure sensors are:

- ROTAX 4-20mA (P/N 956413): installed on 912/914 engines produced after 2008/05. Connect red wire to pin#11 of CN3 remote module connector; connect white wire to pin#16. Connect pin#6 to pin#17 of CN3 remote module connector.

- Flybox® P/N 602000: compatible with the Rotax 4-20mA sensors. Connect brown wire to pin#11 of CN3 remote module connector; connect white wire to pin#16. Connect pin#6 to pin#17 of CN3 remote module connector.

- ROTAX resistive sensors (ROTAX P/N 956415): installed on 912/914 engines produced before 2008/05. Connect signal wire to pin#16 of CN3 remote module connector; connect ground wire (if present) to pin#10 of CN3 remote module connector.

2.5.6 OUTSIDE AIR TEMPERATURE SENSOR (OAT)

The only supported type of OAT sensors is:

- PT1000 resistive sensors: Connect one wire to pin #8 of CN3 remote module connector and the other wire to aircraft ground.

- Flybox® OAT sensor (P/N 601020):

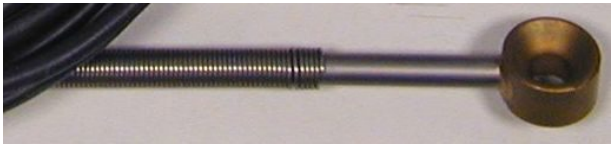

Flybox® OAT sensor is a PT1000 and can be fixed with a M5 countersunk screw.
For optimal outside temperature indication it must not be installed in direct sunlight locations or near heat sources.

2.5.7 CURRENT SENSOR

The current sensor supplied by Flybox® (P/N 601060) is able to measure current between -50 and +50 Amperes. It must not be installed between battery and starter circuit because of the high current flowing into this path.
The current sensor can be installed in one of the three locations as shown in the simplified electrical diagram below:

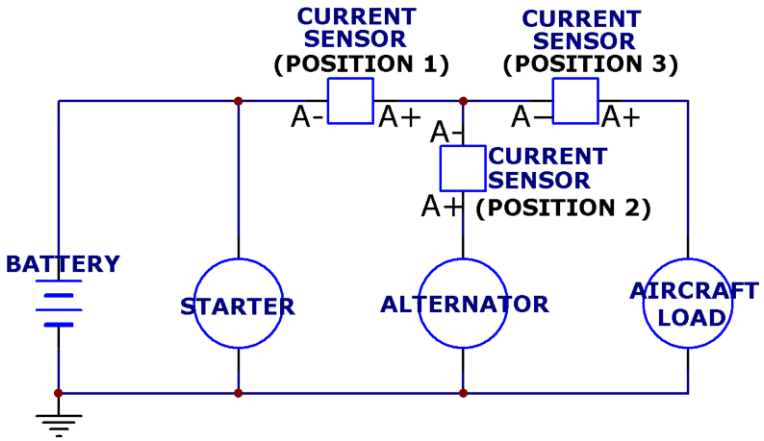

Position 1: in this position the current sensor measure current flow into or out of your battery (indicator show both positive and negative currents).
Position 2: in this position the current sensor measure only the current that the alternator supply to both battery and aicraft loads.
Position 3: in this position the current sensor measure the current flowing into the aircraft loads.

- ***Electrical connections:***

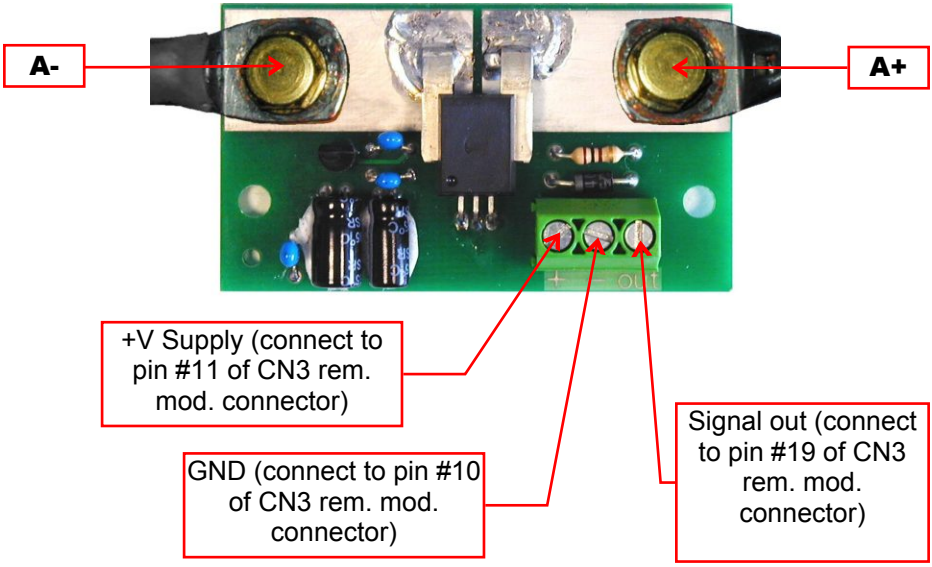

- ***Current sensor auto-calibration***

Auto-calibration is useful to eliminate any reading errors caused by the wiring or the sensor itself. The procedure is as follows:

1 - Connect only the 3 wires of the current sensor to the Remote Module.
2 - Connect together the 2 wires "A+" and "A-" and keep them away from the sensor board.
3 - Turn-on the Vigilus.
4 - Go to MAIN MENU → SETTINGS → INSTRUMENTS → AMP → AMP OFFSET and click “ENTER” to edit the value; click again “ENTER” to store current calibration or press the “ESC” pushbutton to exit without saving. Vigilus has now stored the calibration value and you can turn it off and restore the harness by reconnecting the two cable to the current sensor.

2.5.8 FUEL LEVEL SENSORS

- The remote module has 3 fuel level inputs that can be connected to both resistive sensors (with max resistance of 300 ohm) and capacitive sensors (with output voltage of 0~5 Volt).
- Resistive sensors can be of two types, both supported by the remote module: resistive sensors that increase resistance as you add fuel and resistive sensors that decrease resistance as you add fuel.
- It's also possible to install a mixed type of sensors (i.e. 1 resistive + 1 capacitive).
- ***CAUTION***: Resistive type fuel level sensors connected to Vigilus must not be connected to any other instrument. Disconnect any previously used instrument.

- ***Fuel level sensors connection:***

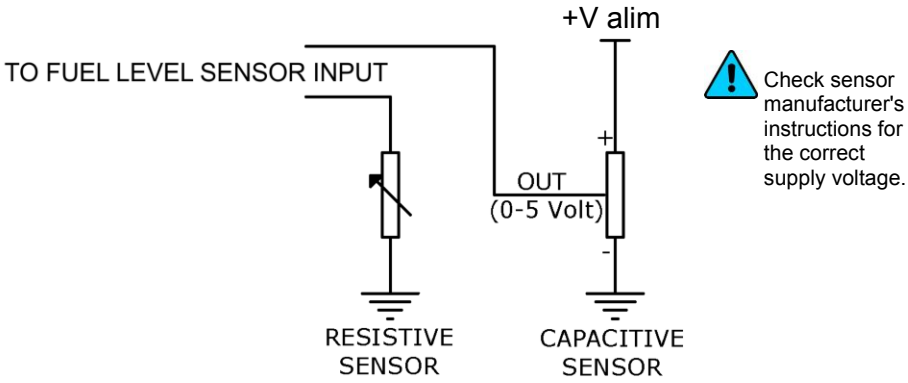

NOTE: Refer to fuel level sensors manual for the detailed electrical and mechanical installation.

Make sure that the fuel level sensors are mounted so that all the fuel in the tank can be measured. If the fuel sensor cannot measure completely the fuel in the tank, the instrument will display inaccurate readings.

For example (**fig.1**) if a fuel sensor cannot measure the lowest part of the tank that contains 7 liters, the instrument will display “0” (zero) for fuel level of 7 liters and below.

Another example (**fig.2**) is if a tank can holds 40 liters of fuel but at 25 liters the fuel is at the top of the sensor, the maximum that the instrument will display is 25 liters.

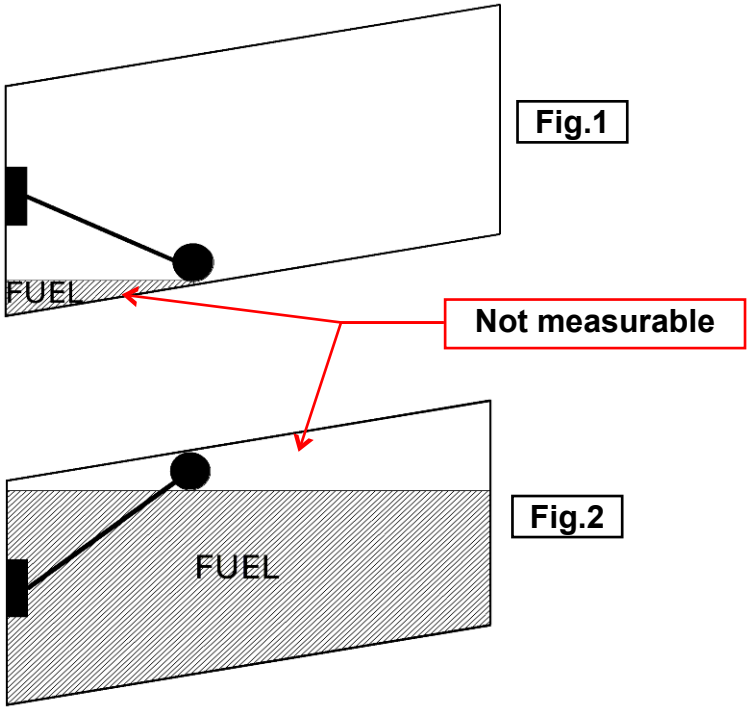

2.5.9 FUEL PRESSURE SENSOR

The fuel pressure transducer+fitting is supplied by Flybox® (P/N 601040); the electrical connections are:

- White wire (signal out) to pin #20 of CN3 remote module connector
- Green wire (GND) to pin #21 of CN3 remote module connector
- Brown wire (+V Supply) to pin #22 of CN3 remote module connector

The pressure range accepted is from 0 to 4 bar.

NOTE: an improper wiring can cause damage to the fuel pressure transducer.

- ***Mechanical installation hints:***

- Screw tight the transducer to the fitting; no other seal material is required because the sealing is ensured by the green fuel-resistant gasket of the transducer.
- To check that no screw out occur you must mark with a permanent pencil the transducer and fitting:

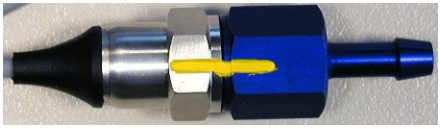

2.5.10 USB VIDEO INPUT

Vigilus can show images from 3 cameras via the optional Videograbber device cod. 653000 sold as an option.
The videograbber must be connected to Vigilus USB port.

Video signal of the cameras must be PAL composite video (CVBS).

You can use the Flybox cameras - Cod. 601070 or buy other suitable cameras from the market.

Flybox Optional Videograbber

2.5.11 SEPARABLE CONNECTIONS FOR THERMOCOUPLES

If it is necessary to split the thermocouples connections in separable harnesses, you must use proper cables and connectors, available also from FLYBOX® with ord.cod.601012.

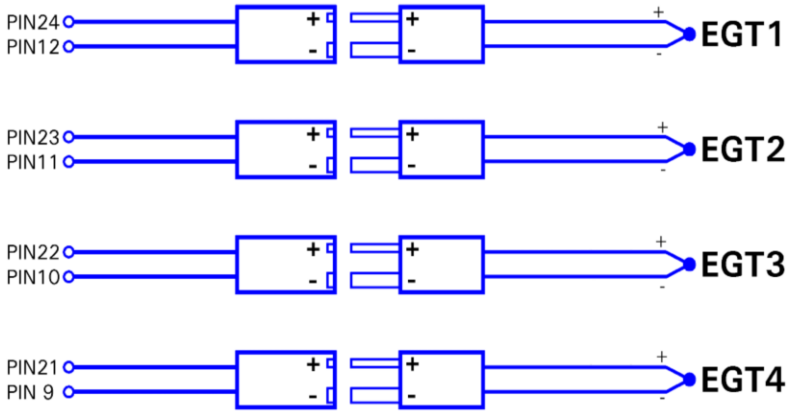

Refer to the Thermocouples manufacturer or supplier to know the wire colours.

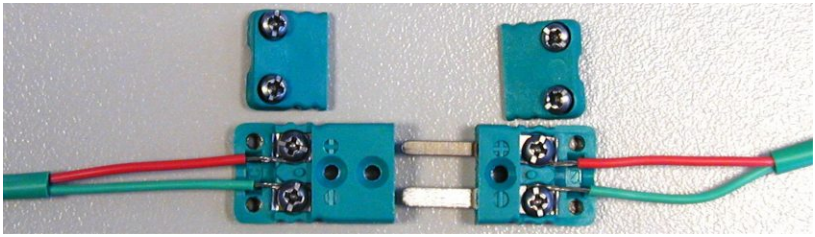

NOTE: Wires' color are referred to FLYBOX® supplied thermocouples, other thermocouples may have different colors coding. In case of wrong wiring the temperature indication will not be correct.

NOTE: If you have bought the ready to use wiring for Vigilus+Remote module (ord.cod.652010), you have already included two of this separable connections (EGT1 and EGT2).

Available options, probes and accessories

Cod.	Description
601010	EGT K Thermocouple 2.5 mt probe + stainless steel fittings
601013	20 cm Pre-wired connector for EGT probe with crimped Molex Microfit pins
601014	Compensated Female flying connector for EGT K Thermocouple
601015	Compensated Male flying connector for EGT K Thermocouple
601016	2 poles red/green silicone cable
601017	Stainless steel fittings only
601018	EGT K Thermocouple 2.5 mt probe
601019	Male + Female flying connector for EGT K Thermocouple

SECTION 3

TECHNICAL SPECIFICATIONS

3.1 VIGILUS:

- 3.5” TFT color LCD screen.
- Display brightness: 1000nits, adjustable.
- Standard 3 1/8” (80mm) panel mount
- Dimensions: 86 x 86 x 30.3 mm
- Weight: 185 g
- Supply voltage: 10 ~ 30 V=
- Supply current: 200mA Max
- Operational temperature range: -20 ~ +70°C
- Audio LineOut for intercom for aural warnings
- 2 CAN Bus communication interfaces
- 1 GPS NMEA 183 serial input: standard RS-232, NMEA-0183, sentences required: $GPRMB, $GPRMC
- 1 RS232 serial port for Autronic ECU
- Internal storage for 200 hours of datalog
- Video inputs with the Optional USB Flybox Video Grabber Cod. 653000 and up to 3 Optional Color cameras Cod. 601070.

CLEANING

The screen is very sensitive to some cleaning materials and should be cleaned with a clean, damp cloth only.

3.2 REMOTE ENGINE MODULE:

- Dimensions: 135 x 79 x 20 mm
- Weight: 185 g
- Supply voltage: 10 ~ 30 V=
- Supply current: 50mA Max
- Operational temperature range: -20 ~ +70°C
- 1 CAN Bus communication interface
- 4 programmable outputs (active low, 300mA / 4W max)

SENSORS INPUTS:

- Current input from Flybox® sensor cod. 601060
- Fuel pressure from Flybox® transducer 601040
- Rotor tachometer from sensor
- Oil pressure from Flybox®, ROTAX
- 2 Oil temperature inputs Rotax or PT1000 sensors
- OAT from Flybox® PT1000 sensor cod. 601020
- 2 CHT for ROTAX or J Thermocouples
- 4 Exhaust gas temperature from K thermocouples
- 3 inputs for fuel level sensors: resistive (300 ohm max) or capacitive (0-5V)

One Year Warranty:

Product support and warranty information can be found at www.flyboxavionics.it.
Flybox® warrants this Product to be free from defects in materials and workmanship for 12 months from date of delivery. The inactivity of the Products determined by periods of repair does not involve the extension of the warranty period.
This warranty covers only defects in material and workmanship found in the products under normal use and service when the product has been properly installed and maintained. This warranty does not cover failures due to abuse, misuse, accident, improper maintenence, failures to follow improper instructions or due to unauthorized alterations or repairs or use with equipments with which the Products is not intended to be used. Flybox®, after verification of the complaint and confirmation that the defect is covered by warranty, at its sole discretion, will either replace or repair the Products at no costs for the customer. Alterations, additions, or repairs not performed by the manufactuter shall negate any warranty. This warranty doesn't cover cosmetic or incidental damages. Shipping costs, taxes, custom fee, any other duties and any costs incurred while removing, reinstalling or troubleshooting the Products, shall be at customer's charge.

TO THE EXTENT PERMITTED BY LAW, THE WARRANTIES AND REMEDIES CONTAINED HEREIN ARE EXCLUSIVE AND IN LIEU OF ALL OTHER WARRANTIES EXPRESS, IMPLIED, OR STATUTORY, INCLUDING ANY LIABILITY ARISING UNDER ANY WARRANTY OF MERCHANTABILITY OR FITNESS FOR A PARTICULAR PURPOSE, STATUTORY OR OTHERWISE. THIS WARRANTY GIVES YOU SPECIFIC LEGAL RIGHTS, WHICH MAY VARY BASED ON YOUR JURISDICTION.
TO THE EXTENT PERMITTED BY LAW, IN NO EVENT SHALL UPRIGHT BE LIABLE FOR ANY INCIDENTAL, SPECIAL, INDIRECT, OR CONSEQUENTIAL DAMAGES, WHETHER RESULTING FROM THE USE, MISUSE, OR INABILITY TO USE THIS PRODUCT. SOME JURISDICTIONS DO NOT ALLOW THE EXCLUSION OF INCIDENTAL OR CONSEQUENTIAL DAMAGES, SO THE ABOVE LIMITATIONS MAY NOT APPLY TO YOU.

Out of warranty repairs

Products that can not be repaired under warranty as out of the maximum term or that do not work for reasons that would have been covered by warranty, can be repaired at a flat rate as described on the site. For out-of-warranty eligible damages, the repair must be assessed for each individual case.

Term of Use and Disclaimer

Limitation of Liability

In no event shall MICROEL s.r.l. be liable for any direct, indirect, punitive, incidental, special consequential damages whatsoever arising out of or connected with the use or misuse of its products.

Entire Obligation

The TERM OF USE, WARRANTY AND DISCLAIMER document states the entire obligation of MICROEL S.r.l. with respect to the products. If any part of this disclaimer is determined to be void, invalid, unenforceable or illegal, including, but not limited to the warranty disclaimers and liability disclaimers and liability limitations set forth above, then the invalid or unenforceable provision will be deemed superseded by a valid, enforceable provision that most closely matches the intent of the original provision and the remainder of the agreement shall remain in full force and effect.

General

This disclaimer statement is governed by the laws of ITALY. You hereby consent to the exclusive jurisdiction and venue of the Courts of competent jurisdiction, ITALY, in all disputes arising out of or relating to the use of this product. Use of this product is unauthorized in any jurisdiction that does not give effect to all provisions of these terms and conditions, including without limitation this paragraph.

List of revisions

Date	Revision	Description
01/2020	1.0	First release

Flybox® reserves the right to change the terms, conditions, and notices under which their products are offered without prior notice".

MICROEL s.r.l.
Via Mortara 192-194
27038 Robbio (PV) - ITALY
Tel +39-0384-670602 - Fax +39-0384-671830
www.flyboxavionics.it